UNIVERSITY OF CAMBRIDGE INTERNATIONAL EXAMINATIONS
General Certificate of Education
Advanced Subsidiary Level and Advanced Level

CANDIDATE NAME	
CENTRE NUMBER	
CANDIDATE NUMBER	

8870745868

PHYSICS **9702/32**

Paper 32 Advanced Practical Skills 2 **October/November 2007**

2 hours

Candidates answer on the Question Paper.

Additional Materials: As listed in the Confidential Instructions.

READ THESE INSTRUCTIONS FIRST

Write your Centre number, candidate number and name on all the work you hand in.
Write in dark blue or black pen.
You may use a soft pencil for any diagrams, graphs or rough working.
Do not use staples, paper clips, highlighters, glue or correction fluid.
DO **NOT** WRITE IN ANY BARCODES.

Answer **both** questions.
You will be allowed to work with the apparatus for a maximum of one hour for each question.
You are expected to record all your observations as soon as these observations are made, and to plan the presentation of the records so that it is not necessary to make a fair copy of them. The working of the answers is to be handed in.
Additional answer paper and graph paper should be submitted only if it becomes necessary to do so.
You are reminded of the need for good English and clear presentation in your answers.

At the end of the examination, fasten all your work securely together.
All questions in this paper carry equal marks.

For Examiner's Use	
1	
2	
Total	

This document consists of **9** printed pages and **3** blank pages.

© UCLES 2007

BLANK PAGE

For Examiner's Use

1 In this experiment, you will determine the resistance of an unknown resistor R_1.

(a) A wire XY has been taped to a metre rule. Connections to this wire may be made using crocodile clips.

(i) Connect the circuit shown in Fig. 1.1. R_1 has been labelled. R_2 may be made using any series or parallel combination of the remaining resistors. These resistors may be connected to each other by twisting the resistor wires together.

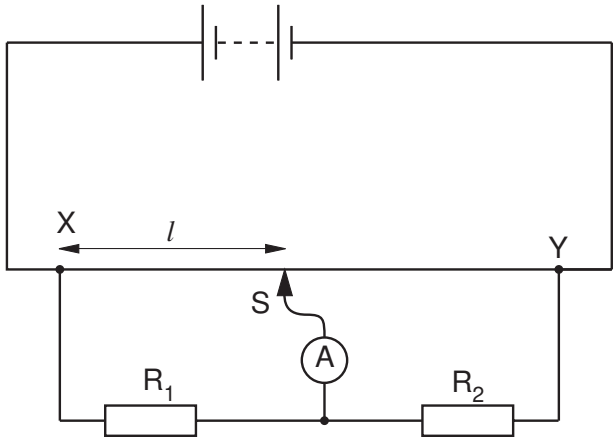

Fig. 1.1

(ii) Position the sliding contact S on the wire and adjust the position of the contact until the reading on the meter is zero. Record the length l in centimetres from X to S.

l = ... cm

For Examiner's Use

(b) Change the value of the resistance R_2 of the resistor R_2 and repeat **(a)(ii)** until you have six sets of readings for l and R_2. Values of l should be given in centimetres. Include values of $\frac{1}{l}$ in your table of results. When you have finished making measurements, disconnect the battery.

(c) **(i)** Plot a graph of $\frac{1}{l}$ (y-axis) against R_2 (x-axis).

(ii) Draw the line of best fit.

(iii) Determine the gradient and the y-intercept of the graph.

gradient = ...

y-intercept = ...

© UCLES 2007

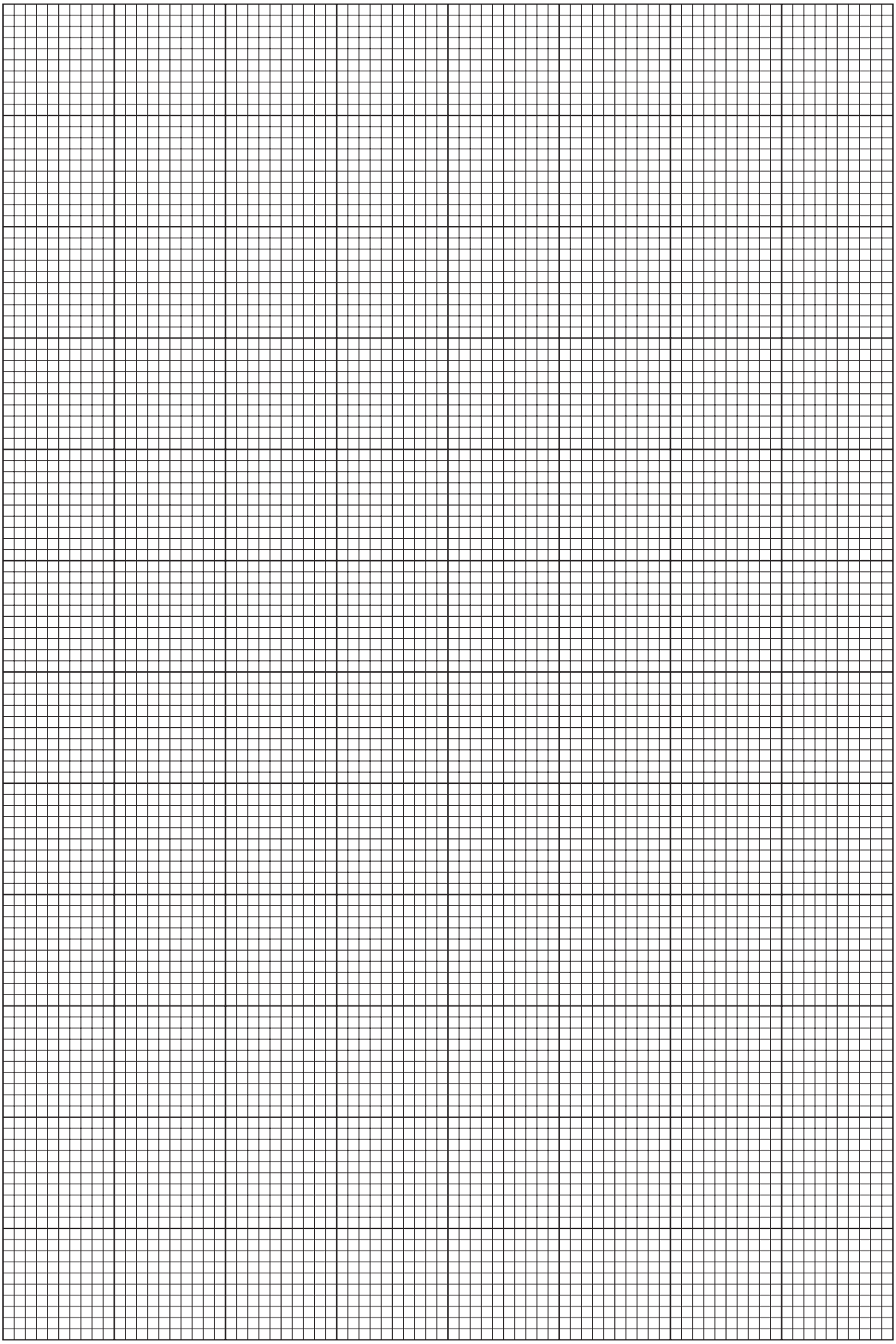

(d) The relationship between l and R_2 is

$$\frac{1}{l} = \frac{R_2}{LR_1} + k$$

where R_1 is the resistance of the resistor R_1, L = 100 cm and k is a constant.
Using your answers from **(c)(iii)**, determine values of R_1 and k. Include appropriate units in each case.

R_1 = ...

k = ...

2 When an object falls in air, it experiences a drag force which opposes the motion of the object. Larger objects experience greater drag forces. In this experiment, you will investigate how the terminal velocity of a paper cone falling in air depends on the diameter of the cone.

(a) Cut a sector out of a piece of filter paper as shown in Fig. 2.1.

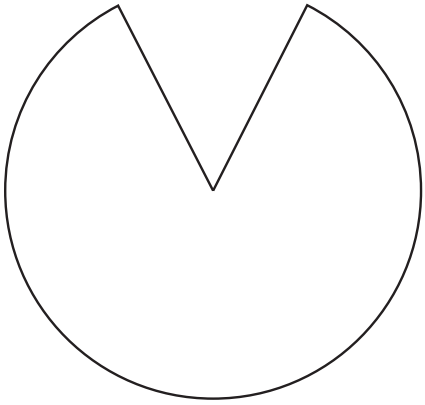

Fig. 2.1

(b) (i) Tape the straight edges of the paper together to produce a cone, as shown in Fig. 2.2.

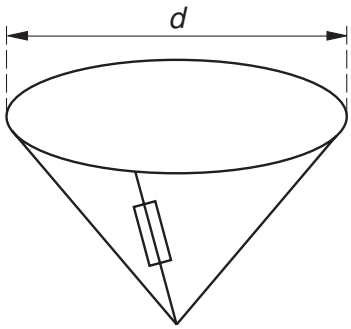

Fig. 2.2

(ii) Measure and record the diameter *d* of the cone.

d = ... cm

(c) (i) Mount a metre rule vertically using a stand, boss and clamp.

(ii) Release the cone from a short distance above the top of the metre rule, as shown in Fig. 2.3.

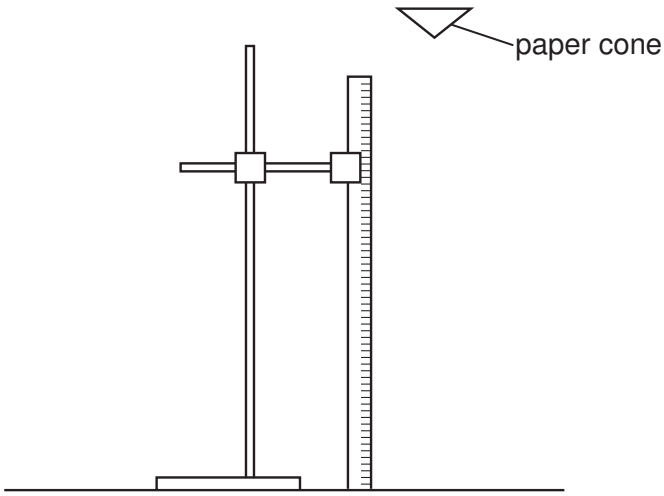

Fig. 2.3

Make and record measurements to determine the time t for the cone to fall through a distance h from the top of the metre rule.

h = ... cm

t = ... s

(d) Estimate the percentage uncertainty in t, showing your working.

percentage uncertainty in t = ...

(e) Calculate the terminal velocity v of the cone.

v = ... cm s^{-1}

For Examiner's Use

(f) **(i)** Remove the tape from the paper and cut away a larger sector as shown in Fig. 2.4.

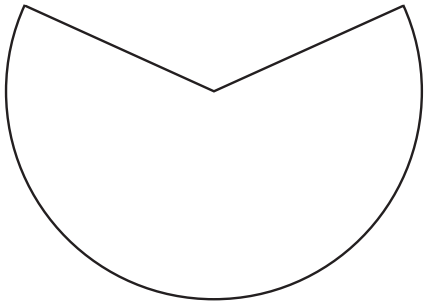

Fig. 2.4

(ii) Repeat **(b)**, **(c)(ii)** and **(e)**, recording your results below.

d = ... cm

h = ... cm

t = ... s

v = ... cm s^{-1}

(g) It is suggested that v is inversely proportional to d. Do the results of your experiment support this suggestion? Explain your reasoning clearly.

.....

.....

.....

.....

(h) (i) State four sources of error or limitations of the procedure in this experiment.

1. .....

.....

2. .....

.....

3. .....

.....

4. .....

.....

(ii) Suggest four improvements that could be made to this experiment. You may suggest the use of other apparatus or different procedures.

1. .....

.....

2. .....

.....

3. .....

.....

4. .....

.....

© UCLES 2007

BLANK PAGE

BLANK PAGE

Permission to reproduce items where third-party owned material protected by copyright is included has been sought and cleared where possible. Every reasonable effort has been made by the publisher (UCLES) to trace copyright holders, but if any items requiring clearance have unwittingly been included, the publisher will be pleased to make amends at the earliest possible opportunity.

University of Cambridge International Examinations is part of the Cambridge Assessment Group. Cambridge Assessment is the brand name of University of Cambridge Local Examinations Syndicate (UCLES), which is itself a department of the University of Cambridge.